Filter cover

Opening and closing

Before opening the cover

Make sure, that the filter is atmospheric.
This can be checked with the pressure gauze at the top of the filter.

Opening filter cover

1. Loosen the bolts crosswise which hold the cover.
2. Turn the bolts out of the way.
3. Insert the pump handle in the hydraulic pump.

Warning

Do not raise the cover more then 50mm.

4. Use the pump to raise the cover.
5. Turn the cover out of the way.

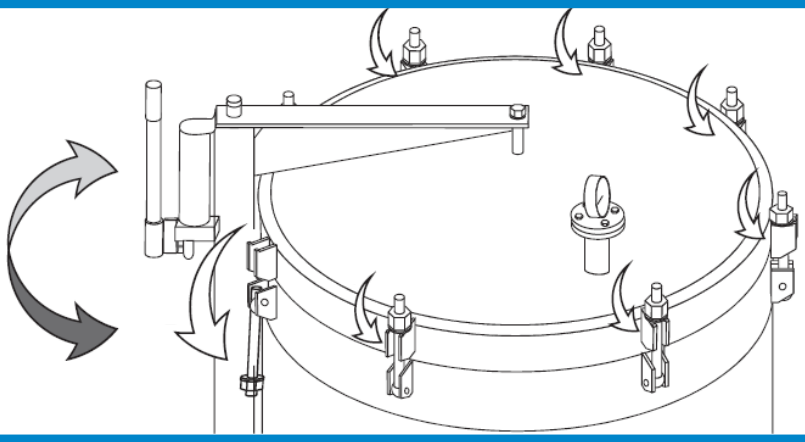

Closing filter cover

1. Turn the filter cover into position over the filter body.
2. Lower the filter cover.
3. Turn the cover clamps into position.
4. Twist all nuts on clamps.
5. Crosswise tighten the clamps .

Note:

The cover alignment plates on the side of the cover guides you to position the cover correctly.
Do not let the alignment plates hit the filter body.

Note:

Tighten the filter cover bolts with your hand (±40Nm).

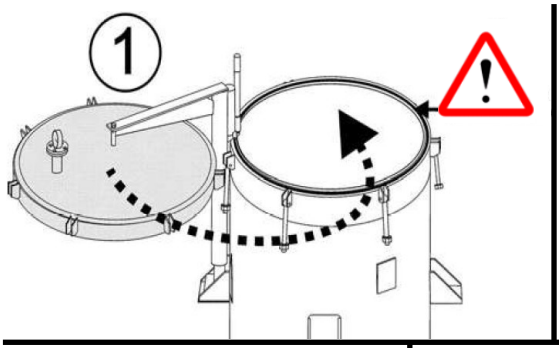

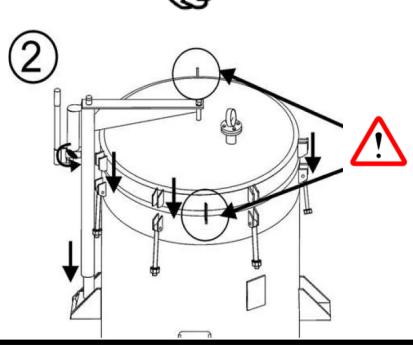

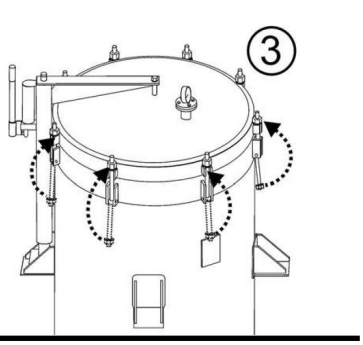

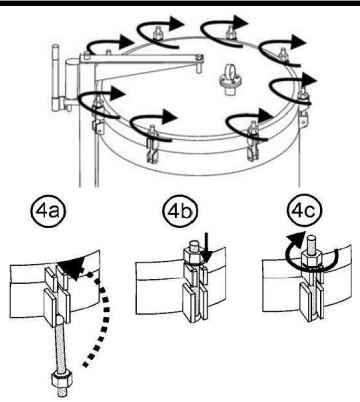

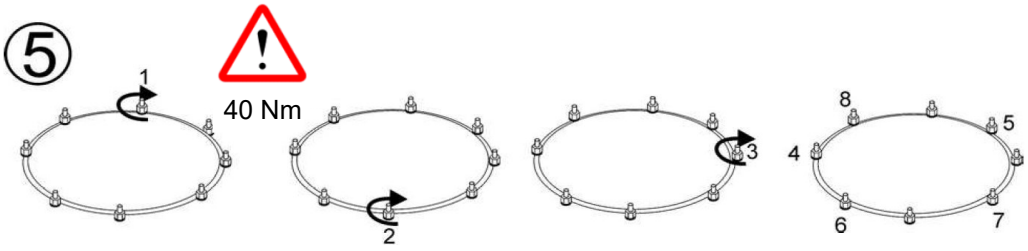

Tighten bolts crosswise to avoid deformation of the cover.

amafilter Filtration Group

Filtration Group BV
Hanzeweg 21
7241 CS, Lochem, the Netherlands

Phone +31 573 297 777
E-mail service.amafilter@filtrationgroup.com

Website
www.amafiltration.com

2024-08