Cover Lift

Maintenance & Service



Before starting the work

Make sure, that the filter is taken out of service and is safe to work on.
Ensure all safety measures are in place.

Inspection Schedule

Monthly

1. Inspect all moving parts and ensure they move freely. Check for damage, dirt build up between rotating surfaces. Remove any accumulated dirt, repair damaged components, and free any parts that do not move smoothly.
2. Inspect all nuts and securing devices to ensure they are present and securely fastened.
3. Inspect all hydraulic connections for signs of damage or leakage.
4. Inspect all gaskets and seals for damage, wear, or leakage.

Yearly

1. Inspect all moving parts and verify that they are adequately lubricated with oil or grease, particularly after the equipment has been cleaned using industrial cleaning or degreasing agents.
2. Inspect the bearing bushes on signs of wear or damage. Replace them if necessary.

Cover-to-Bayonet Ring Alignment Check

When opening the filter the bayonet ring is moved to the open position after which the cover lift can be used to lift the cover. When the cover has been lifted it can be swung away from above the filter housing to make the housing accessible for inspection and removing the filter elements.

As soon as the cover needs to be closed the cover lift is rotated back so that the cover is centered above the housing, making it possible to lower it on top of the housing without damaging the bayonet ring.

To make sure the cover is properly aligned an end stop is welded on the housing and an adjustment ring is located on the cover lift shaft. On this ring an adjustment bolt is fitted to fine tune the final position of the cover. See picture.

By turning the bolt in or out the location of the cover can be horizontally adjusted.

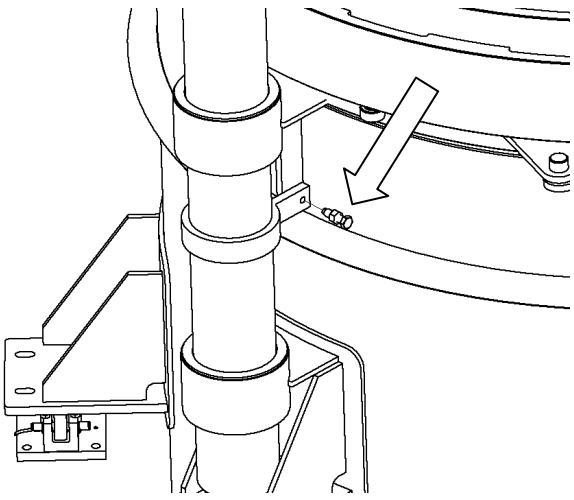

amafilter Filtration Group

Filtration Group BV
Hanzeweg 21
7241 CS, Lochem, the Netherlands

Phone +31 573 297 777
E-mail service.amafilter@filtrationgroup.com

Website
www.amafiltration.com

Cover Lift

Maintenance & Service

Servicing the Cover Lift Guide and Bearing Bushes

The cover lift is equipped with two guide bearings that support the weight of the cover during lifting and facilitate smooth swiveling of the cover.

The bearing bushes are subject to normal wear and should be inspected, cleaned, and re-greased periodically to ensure reliable operation and to extend their service life.

Procedure

To service the bearing bushes, the cover lift must first be removed. Refer to the "Install the Cover Lift" section of the IOM and remove the cover lift by following the installation procedure in reverse order.

1. Remove the cover lift.
2. Thoroughly clean the inside surfaces of the bearing bushes, removing all dirt, old grease, and other contaminants.
3. Apply fresh grease of the specified type to the bearing bushes.

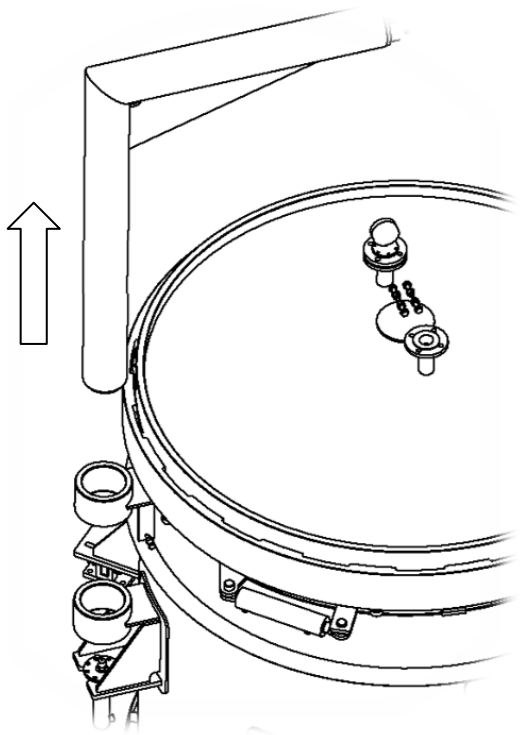

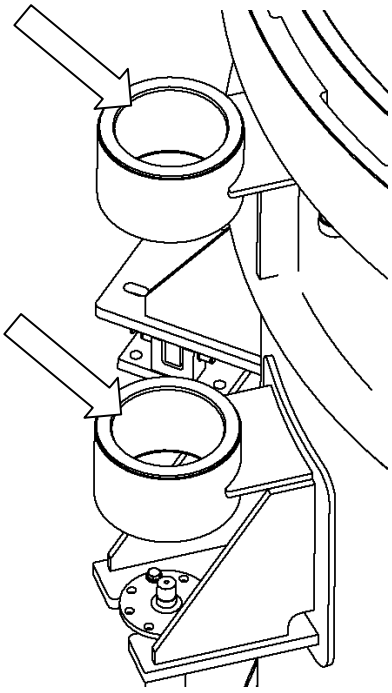

After cleaning and lubricating the bearing bushes, reinstall the cover lift.

During reassembly, ensure that:

- The cover lift stop used for centering is correctly positioned.
- All fasteners are properly installed and tightened to the required torque.
- The cover lift moves freely and operates smoothly after installation.

Note

Regular cleaning and lubrication of the bearing bushes will reduce wear, improve operating performance, and help prevent premature failure of the cover lift assembly.