Hydraulic Bayonet Closure

Maintenance & Service



Before starting the work

Make sure, that the filter is taken out of service and is safe to work on.
Ensure all safety measures are in place.

Inspection Schedule

Weekly

1. Inspect all moving parts and ensure they rotate freely. Check for damage, dirt buildup between rotating surfaces, and contamination on tie rods. Remove any accumulated dirt, repair damaged components, and free any parts that do not move smoothly.
2. Inspect all circlips and lock nuts to ensure they are present and securely fastened.

Monthly

1. Inspect all hydraulic connections for signs of damage or leakage.
2. Inspect all gaskets and seals for damage, wear, or leakage.
3. Inspect all moving parts and verify that they are adequately lubricated with oil or grease, particularly after the equipment has been cleaned using industrial cleaning or degreasing agents.

Every 6 months

1. Inspect all hydraulic hoses for damage, wear, or leakage. Replace any hose showing signs of deterioration or leakage.
2. Check the oil level in the hydraulic oil reservoir and top up if required.
3. Inspect all electrical components to ensure they are clean and free from damage. Remove any accumulated dirt and repair or replace damaged components as necessary.

Yearly

1. Inspect the sliding plates beneath the bayonet ring for wear or damage. Adjust or replace the sliding plates if required.
2. Inspect the keys for signs of wear or damage. Replace them if necessary.
3. Check the alignment between the cover lift and the bayonet rings. Ensure proper alignment to prevent damage during cover lifting and lowering operations.

amafilter Filtration Group

Filtration Group BV
Hanzeweg 21
7241 CS, Lochem, the Netherlands

Phone +31 573 297 777
E-mail service.amafilter@filtrationgroup.com

Website
www.amafiltration.com

Hydraulic Bayonet Closure

Maintenance & Service

Cleaning Guide Wheel on Bayonet Ring

It is important to regularly clean both the guide wheel shaft and the top surface of the guide wheel.

Dirt and debris can accumulate between the guide wheel and the retaining circlip located underneath it. As contamination builds up, it can force the circlip out of its groove, allowing the guide wheel to move freely up and down the shaft during rotation of the bayonet ring.

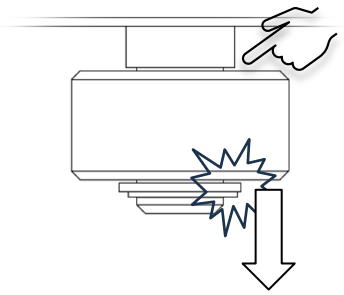

If left uncorrected, this condition may cause the guide wheel to disengage from the shaft and fall off, potentially resulting in equipment damage and unsafe operating conditions.

Recommended Action:

During routine inspections, thoroughly clean the guide wheel shaft, guide wheel surfaces, and retaining circlip area to prevent contamination buildup and ensure the guide wheel remains securely retained.

Install or Reinstall Guide Wheel on Bayonet Ring

In some cases, dirt and debris can accumulate between the guide wheel shaft and the guide wheel itself. Over time, this buildup can force the retaining circlip out of its groove. When this occurs, the guide wheel is no longer securely retained and may gradually move downward along the shaft during rotation of the bayonet ring. In severe cases, the guide wheel can disengage completely and fall off the shaft.

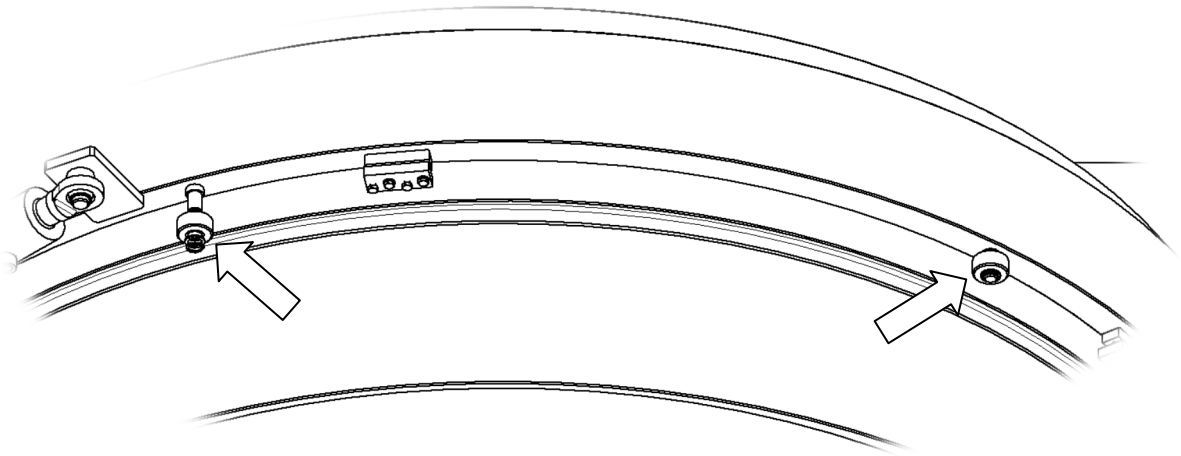

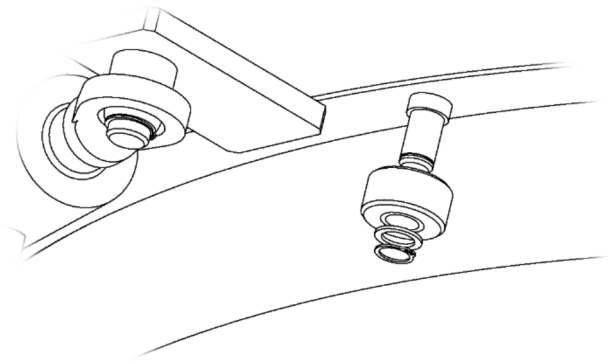

amafilter Filtration Group

Filtration Group BV
Hanzeweg 21
7241 CS, Lochem, the Netherlands

Phone +31 573 297 777
E-mail service.amafilter@filtrationgroup.com

Website
www.amafiltration.com

Hydraulic Bayonet Closure

Maintenance & Service

Procedure

1. Thoroughly clean the guide wheel shaft and the bronze bearing inside the guide wheel.
2. Reinstall the guide wheel onto the shaft.
3. Install the washer and retaining circlip to secure the guide wheel and prevent it from moving off the shaft.
4. Ensure the circlip is fully seated in its groove. A properly seated circlip can typically be rotated more easily within the groove, which provides a simple method of verification.

The bronze bearing inside the guide wheel is self-lubricating and does not require additional lubrication. However, if lubricant is applied, it will not damage the bearing or affect its performance.

Safety Precautions

During installation, the guide wheel may need to be carefully positioned to align correctly with the shaft.

When performing this operation:

1. Use a suitable lever (pry bar) or positioning tool to install the guide wheel.
2. Keep hands clear of all pinch points to prevent crushing injuries beneath the guide wheel.
3. Ensure the guide wheel is properly aligned with the shaft before installation to prevent damage or misalignment.



Failure to follow these precautions may result in serious personal injury.



Note

When ordering a replacement guide wheel, always specify the article number listed in the spare parts list to ensure the correct fit and reliable operation.

amafilter Filtration Group

Filtration Group BV
Hanzeweg 21
7241 CS, Lochem, the Netherlands

Phone +31 573 297 777
E-mail service.amafilter@filtrationgroup.com

Hydraulic Bayonet Closure

Maintenance & Service

Adjusting Slide Pads for the Bayonet Ring

Several slide pads are mounted underneath the bayonet ring, as shown in the illustration below. These slide pads support the weight of the bayonet ring when it is in the fully open position.

The slide pads are wear components and must be inspected and adjusted periodically to compensate for normal wear.

Procedure

1. Close the bayonet ring completely.
2. Measure the gap between the underside of the bayonet ring and the top surface of the slide pads. In the closed position, this clearance should be 1 mm.
3. Use a feeler gauge to verify the clearance.
4. If the measured gap exceeds 1 mm, the slide pads must be adjusted upwards toward the bayonet ring.
5. To adjust the slide pads, use the adjustment bolts highlighted in the illustration.
6. Before making any adjustment, loosen the two securing bolts to allow the slide pad assembly to move freely.
7. Adjust the slide pad position until the required 1 mm clearance is achieved.
8. Retighten all bolts securely after the adjustment is complete.

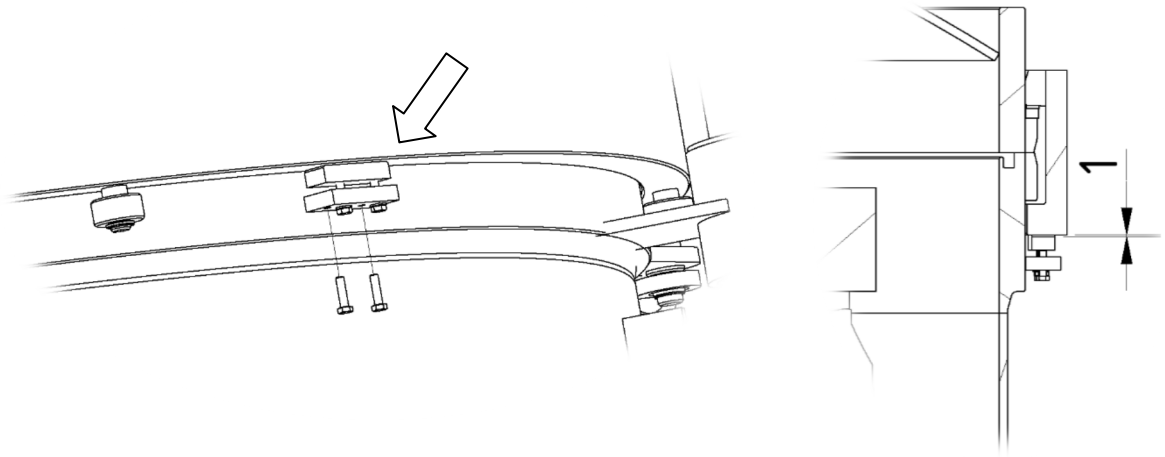

Note

Ensure that all slide pads are adjusted evenly to provide proper support for the bayonet ring and to prevent uneven loading or premature wear. Regular inspection and adjustment will help maintain smooth operation and extend the service life of the slide pads and bayonet ring assembly.

amafilter Filtration Group

Filtration Group BV
Hanzeweg 21
7241 CS, Lochem, the Netherlands

Phone +31 573 297 777
E-mail service.amafilter@filtrationgroup.com

Website
www.amafiltration.com

Hydraulic Bayonet Closure

Maintenance & Service

Measuring Wear on Bayonet Ring Keys

Keys are welded to the inside of the bayonet ring and to the cover retention ring. These keys transfer the clamping force required to maintain a secure seal during operation.

As the keys are subject to wear, they must be inspected and measured periodically to determine the remaining contact surface and ensure reliable operation.

Over time, wear of the keys will allow the bayonet ring to rotate slightly further during closing. As a result, the lower keys will gradually become visible when viewed from above. This is a normal indication of wear. However, a minimum contact length of 55 mm must always be maintained between the mating keys to ensure that the contact pressure remains within acceptable limits.

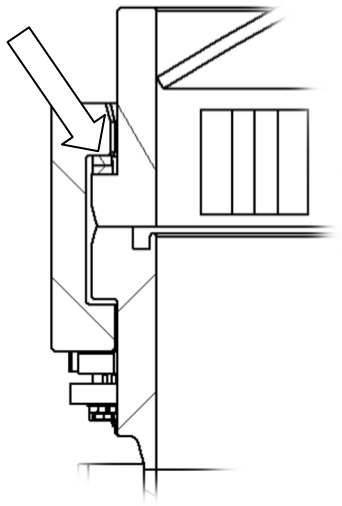

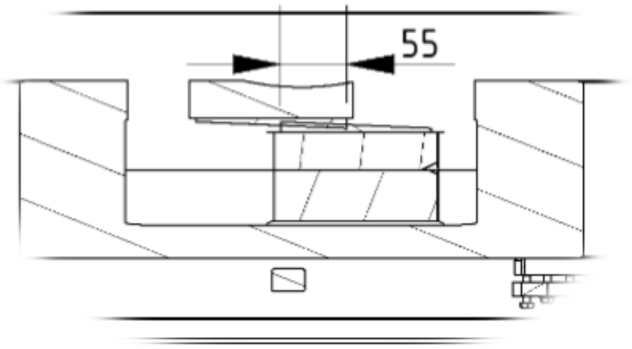

Procedure

1. Measure and record the total length of the key while the cover is in the lifted position.
2. Close the cover and fully close the bayonet ring.
3. Calculate the maximum allowable visible key length by subtracting the minimum required contact length of 55 mm from the total key length.
4. Measure the visible length of the key from the top of the bayonet ring using a tape measure.
5. Compare the measured visible length with the calculated maximum allowable visible length.

If the measured visible length exceeds the allowable value, the key contact length has been reduced below 55 mm and corrective action, such as repair or replacement, should be considered.

Note

Measurements should always be taken with the bayonet ring in the fully closed position. Regular inspection of key wear is essential to maintain proper load distribution, prevent excessive contact stress, and ensure safe operation of the bayonet locking system.

amafilter Filtration Group

Filtration Group BV
Hanzeweg 21
7241 CS, Lochem, the Netherlands

Phone +31 573 297 777
E-mail service.amafilter@filtrationgroup.com

Website
www.amafiltration.com